SARSS Standard Army Retail Supply System

System Description

SARSS is a Combat Service Support peacetime and wartime logistics system which improves supply management and stock control at the Army retail level. SARSS is composed of four interrelated sub-systems: SARSS-I, SARSS-2AD, SARSS- 2AC/B and SARSS-Gateway. Time sensitive activities of receiving, storing, and issuing are processed by SARSS-I at Direct Support Unit (DSU) supply support activities (SSA). Supply management functions such as excess disposition and redistribution are executed by SARSS-2AD and SARSS-2AC at the Materiel Management Center (MMC) of the Division, Separate Brigades, Corps Support Command (COSCOM), Theater Army Area Commands (TAACOM), Theater Army Materiel Management Center (TAMMC), at Installations, and United States Property and Fiscal Offices (USP&FO). SARSS-Gateway provides the capability, through improved communications and advanced automation techniques, to place orders on the Source of Supply (SOS) the same day they are produced by the customer.

Software/Hardware Platform

Software

The application software is developed and maintained by Software Engineering Center-Lee and supporting contractors. The application consists of over 2 million lines of code.

The Commercial Off the Shelf (COTS) software used for SARSS-I and SARSS-2A at the division/separate brigade level is the SOLARIS operating system. SARSS-2AC/2B uses the HP UNIX operating system, and the INFORMIX 4GL database management system (DBMS). The SARSS-Gateway uses SOLARIS as its operating system and the INFORMIX 4GL database management system (DBMS).

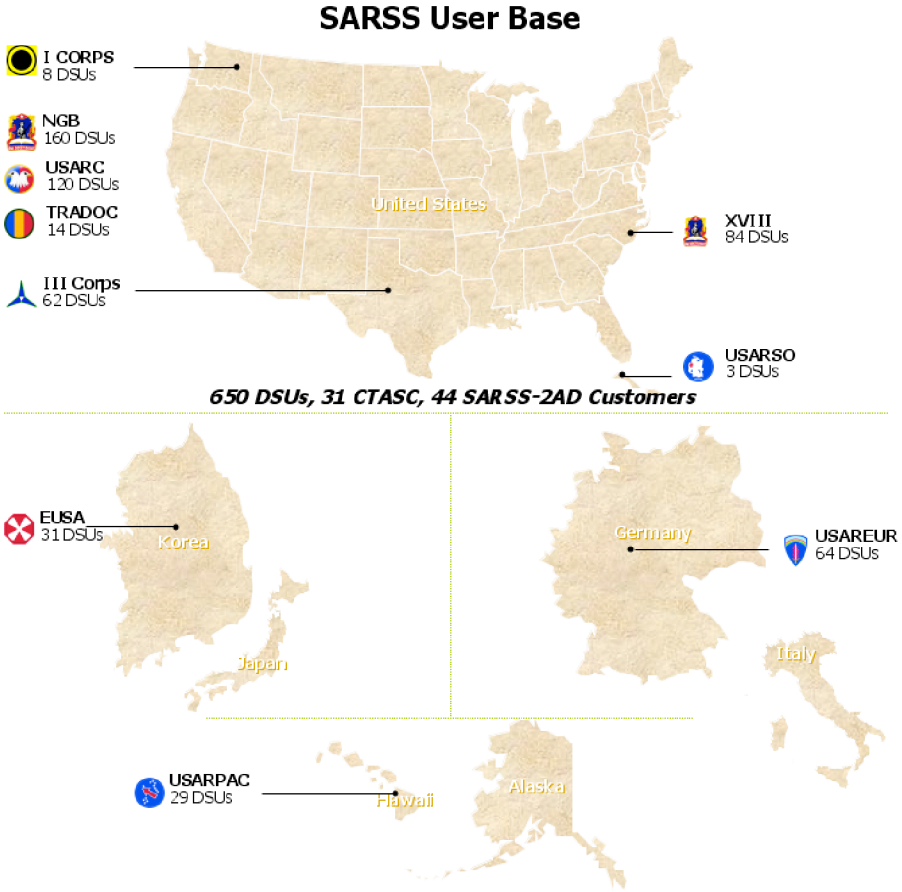

Hardware

SARSS-I operates on COTS non-developmental item (NDI) hardware at division/ non-division Supply Support Activities (SSA) in the tactical environment, and on equivalent information technology (IT) equipment at installation storage sites in the sustaining base environment. SARSS-2A will operate on NDI hardware at division/separate brigade Materiel Management Centers (MMC) and on Corps/Theater ADP Service Center-Phase II (CTASC-II)/ standard installation IT equipment at levels above division. SARSS-2B will operate on CTASC-II/standard installation ADPE at Corps and higher levels. The SARSS Gateway operates on SUN Enterprise 4000 serial servers.

Telecommunications

SARSS can connect to a number of networks for data transfer. It supports the exchange of information through the use of local area networks (LANs), and Non-Secure Internet Protocol Network (NIPRNET). Connectivity is via dialup lines, direct or leased lines, LANs or FTP. SARSS also uses Blocked Asynchronous Transmission (BLAST) communications software, a universal queue-based file transfer program as its point-to-point protocol.

Security

SARSS processess Sensitive But Unclassified (SBU) logistics data in a system high mode.

Benefits

By using telecommunication Automated Data Processing Equipment (ADPE), decentralizing time sensitive functions, and centralizing non-time sensitive functions, SARSS reduces the time required to meet customer needs, provides commanders and their staff with the capability to more effectively manage supplies, assess supply support status, and rapidly allocate resources to sustain their forces.

The following specific benefits are realized through automation.

a. Provides asset visibility at the SSA, Division, Separate Brigade, Corps, and Theater.

b. Provides capability to cross level parts at all the above levels.

c. Flexible communications capabilities for data exchange between units, echelons, divisions, installations, etc. Communications via telecommunications, directconnect, and magnetic media data exchanges are supported.

d. Transparent interface between the four SARSS components which facilitates accurate data exchange.

e. On-screen data entry forms designed to promote accurate entry of manual data by SARSS operators and managers.

f. Production of a machine readable history file as required by regulation and public law.

g. Timely processing of customer requests and DSU receipts to facilitate immediate release of available stocks to fill valid outstanding requirements.

h. Support for a large on-line terminal network within the Corps level system and from one to five terminals connected to the SARSS-1 or SARSS-2A Division systems.

i. Maintenance of accurate supply records covering all receipts, issues, and storage related transaction history data.

j. Use of bar code technology in warehouse operations to include receipt processing, location surveys, and inventory processing.

k. Ability to generate command and control information in the required form.

l. Ability to interface with the wholesale supply system to perform all required calculations necessary to compute stockage levels.

m. Capability for rapid deployment to all areas of the world.

n. Capability to operate independently and interface effectively with existing and planned Army STAMIS.

o. Reduced order-ship-time.

p. Reduction of excess on-hand stock through automated redistribution.

Fielding Status

SARSS is fielded worldwide to all Active Army, Army Reserve, and NGB supply storage sites and supply management activities, including TDA activities and National Guard United States Property and Fiscal Office (USP&FO) sites.

SARSS Architecture

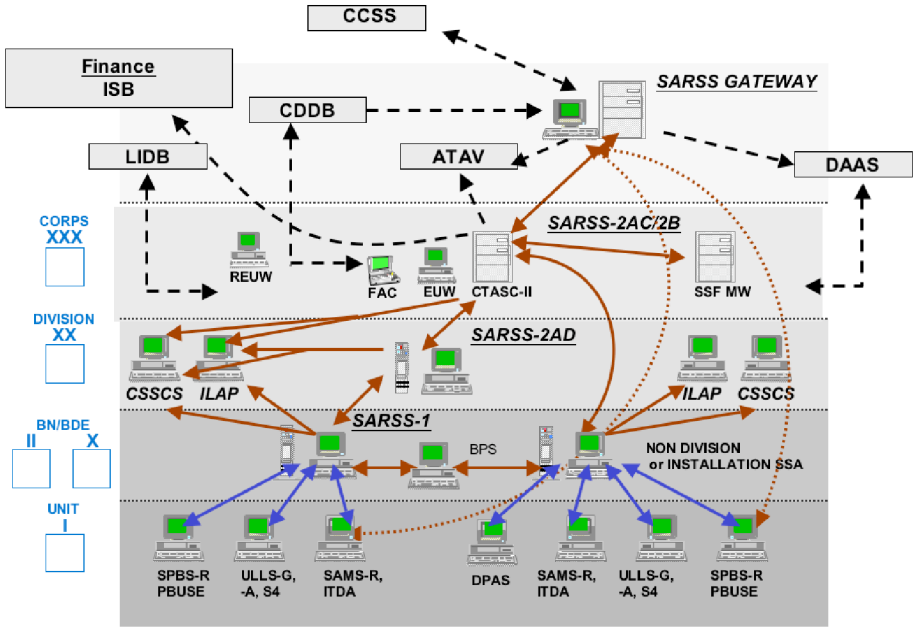

Project Manager Logistics Information Systems (LIS)
COL David Coker, QM

Product Manager ALIS
Mr. Michael Verville

Project Officer SARSS
Mr. Andy Kellerman
kellermg@lee.army.mil

DEPT OF THE ARMY
PROJECT MANAGER
Logistics Information Systems
ATTN: SFAE-PS-RS
800 LEE AVENUE
FORT LEE, VA 23801-1718

TEL: *COMM: 804-734-6650*
DSN: 687-6650
FAX: *COMM: 804-734-6832*
DSN: 687-6832

www.pmlis.lee.army.mil

Last Update: 26 September 2003